"APPROVED FOR RELEASE: 03/13/2001 CIA-RDP86-00513R001135820007-4

MYCZKOWSKA-WILSKA, Eliza

Corticotherapy in the management of pulmonary hemorrhages.
Gruzlica 33 no.1:45-48 Ja '65

1. Z Kliniki Gruzlicy Pluc Akademii Medycznej w Gdansku (Kierownik: prof. dr. med. T. Kielanowski).

APPROVED FOR RELEASE: 03/13/2001 CIA-RDP86-00513R001135820007-4"

"APPROVED FOR RELEASE: 03/13/2001 CIA-RDP86-00513R001135820007-4

MYCZKOWSKI, Jan

Plant physiology in Czechoslovakia. Wiadom botan 6 no.2:97-107 '62.

1. Zaklad Fizjologii Roslin, Polska Akademia Nauk, Krakow.

APPROVED FOR RELEASE: 03/13/2001 CIA-RDP86-00513R001135820007-4"

"APPROVED FOR RELEASE: 03/13/2001 CIA-RDP86-00513R001135820007-4

MARKOWSKI, A.; MYCZKOWSKI, J.; LEBEK, J.

Preliminary investigations on changes in nitrogen compounds of wheat embryos in the course of germination under various temperature conditions. Bul Ac Pol biol 10 no.4:145-150 '62.

1. Department of Plant Physiology, College of Agriculture, Krakow and Institute of Plant Physiology, Krakow, Polish Academy of Sciences. Presented by A.Listowski.

*

APPROVED FOR RELEASE: 03/13/2001 CIA-RDP86-00513R001135820007-4"

"APPROVED FOR RELEASE: 03/13/2001 CIA-RDP86-00513R001135820007-4

MYCZKOWSKI, K. (Wroclaw)

Sixth Congress of the J.E. Purkyne Czechoslovak Anatomic Society held September 24-27, 1962 in Tatranska Lomnica and Kosice. Folia morphol. 22 no.3:267-269 '63

APPROVED FOR RELEASE: 03/13/2001 CIA-RDP86-00513R001135820007-4"

"APPROVED FOR RELEASE: 03/13/2001 CIA-RDP86-00513R001135820007-4

MYCZKOWSKI, S.

"Frost Damage to Beechwood of the Tatra Mountains," P. 40. (CHRONIC PRZYRODE OJCZYSTA, Vol. 9, No. 6, Nov./Dec. 1953. Krakow, Poland)

SO: Monthly List of East European Accessions, (EEAL), LC, Vol. 4, No. 1, Jan. 1955 Uncl.

APPROVED FOR RELEASE: 03/13/2001 CIA-RDP86-00513R001135820007-4"

"APPROVED FOR RELEASE: 03/13/2001 CIA-RDP86-00513R001135820007-4

MYCZKOWSKI, S.

MYCZKOWSKI, S.

Avalanches and forest s in the Tatra Mountains.

P. 198 Wierchy) Vol. 25, 1956, Krakow, Poland.

SO: MONTHLY INDEX OF EAST EUROPEAN ACCESSIONS (EEAI) LC. VOL. 7, NO. 1, JAN. 1958

APPROVED FOR RELEASE: 03/13/2001 CIA-RDP86-00513R001135820007-4"

"APPROVED FOR RELEASE: 03/13/2001 CIA-RDP86-00513R001135820007-4

Myczkowski, Stefan

Poland/General Division. Conservation of Nature A-5

Abs Jour : Ref Zhur-Biologiya, No 2, 1958, 4705

Author : Myczkowski Stefan
Inst :
Title : Natural Features of the Reservation at Moloszynem in Tatrach

Orig Pub : Chronmy przyr. ojcz., 1957, 13, No 2, 12-22

Abstract : Description of vegetation in the natural reservation, on the territory of which is found the only one in Polish Tatrach fir-birch forest with an admixture of European larch and cedar. Of the rare species of animals encountered here are the bear, lynx, wood cock, and others.

Card 1/

APPROVED FOR RELEASE: 03/13/2001 CIA-RDP86-00513R001135820007-4"

"APPROVED FOR RELEASE: 03/13/2001 CIA-RDP86-00513R001135820007-4

MYCZKOWSKI, S.

"Classification of habitats in Polish mountain forests based upon the example of West Carpathian Mountains."

p. 13 (Sylwan, Vol 102, no. 9, Sept 1958, Warsaw, Poland)

Monthly Index of East European Accessions (AAEI) LC, Vol 9, Sept. 58

APPROVED FOR RELEASE: 03/13/2001 CIA-RDP86-00513R001135820007-4"

"APPROVED FOR RELEASE: 03/13/2001 CIA-RDP86-00513R001135820007-4

MYCZKOWSKI, St.

Forest communities in the chief forestry of Murcki on the Silesian Upland. Acta soc botan Pol 31 no.2:191-218 '62.

1. Zaklad Ochrony Przyrody, Polska Akademia Nauk, Krakow.

APPROVED FOR RELEASE: 03/13/2001 CIA-RDP86-00513R001135820007-4"

"APPROVED FOR RELEASE: 03/13/2001 CIA-RDP86-00513R001135820007-4

MYDLARCIK, S.

AGRICULTURE

Periodical SBORNIK. RADA ZEMEDELSKA EKONOMIKA. Vol. 31, no. 10, Oct. 1959.

MYDLARCIK, S. Contributionto the organization and zoning of cattle raising in a large-scale production system. p. 751.

Monthly List of East European Accessions (EEAI) LC, Vol. 8, no. 3, March, 1959. Uncl.

APPROVED FOR RELEASE: 03/13/2001 CIA-RDP86-00513R001135820007-4"

"APPROVED FOR RELEASE: 03/13/2001 CIA-RDP86-00513R001135820007-4

MYDLARCIK, Svatomir

Result of crossbreeding red white-spotted cattle with Hereford cattle. Vest ust zemedel 10 no.6/7:212 '63.

APPROVED FOR RELEASE: 03/13/2001 CIA-RDP86-00513R001135820007-4"

"APPROVED FOR RELEASE: 03/13/2001 CIA-RDP86-00513R001135820007-4

Mydlarcik, V.

30

Shape and Ageing Effects on the Life of Machine Parts. V. Mydlarčík. (*Sborník vědeckých prací Vysoké školy báňské v Ostravě*, 1955, 1, (1) 56–63). Breakages in service are observed without evidence of plastic deformation which are due to stress concentrators, and transition from ductile to brittle fracture occurs. The mechanism of fracture under relatively low working load is described.

APPROVED FOR RELEASE: 03/13/2001 CIA-RDP86-00513R001135820007-4"

"APPROVED FOR RELEASE: 03/13/2001 CIA-RDP86-00513R001135820007-4

MYDLARCIK, Vladislav, prof. dr. inz.

Study the key coupling by tangential keys. Sbor VŠP strava 4 no. 6:879-894 '63.

APPROVED FOR RELEASE: 03/13/2001 CIA-RDP86-00513R001135820007-4"

"APPROVED FOR RELEASE: 03/13/2001 CIA-RDP86-00513R001135820007-4

L 31775-66 EWP(k)/EWP(h)/EWP(v)/EWP(1)

ACC NR: AP6021659 SOURCE CODE: CZ/0032/66/016/002/0083/0088

AUTHOR: Hydlarcik, V. (Professor; Engineer. Doctor)

ORG: Mining College, Ostrava (Vysoka skola banska)

36
B

TITLE: Calculation of joints incorporating tangential keys

SOURCE: Strojirenstvi, v. 16, no. 2, 1966, 83-88

TOPIC TAGS: material deformation, torque, mechanical engineering

ABSTRACT: The article deals with the calculation of joints between machine parts employing tangential keys as coupling elements, mainly on large shafts transmitting high torque and exposed to impact loads. The results of theoretical analysis are supplemented by experimental research covering the deformation of shafts, hubs and keys. Formulas are derived to evaluate the effect of outer torque and to determine the optimum lateral clearance in the key joint. This paper was presented by Engineer, Doctor K. Zeman. Orig. art. has: 12 figures. [JPRS]

SUB CODE: 13, 20 / SUBM DATE: none / ORIG REF: 004 / OTH REF: 017

Card 1/1 UDC: 621.824.4

APPROVED FOR RELEASE: 03/13/2001 CIA-RDP86-00513R001135820007-4"

"APPROVED FOR RELEASE: 03/13/2001 CIA-RDP86-00513R001135820007-4

MYCZKOWSKA-WILSKA, Eliza; WISNIEWSKA, Lucja

Mental side effects during the use of cycloserine. Gruzlica 33 no.2:117-120 F '65.

1. Z Kliniki Gruzlicy Pluc Akademii Medycznej w Gdansku (Kierownik: prof. dr. T. Kielanowski).

APPROVED FOR RELEASE: 03/13/2001 CIA-RDP86-00513R001135820007-4"

"APPROVED FOR RELEASE: 03/13/2001 CIA-RDP86-00513R001135820007-4

MYDLARZ, Ignacy

Installation for continuous steel casting in the Jednosc Steel Works. Problemy proj hut maszyn 12 no.6:161-171 Je '64

1. "Biprohut", Gliwice.

APPROVED FOR RELEASE: 03/13/2001 CIA-RDP86-00513R001135820007-4"

"APPROVED FOR RELEASE: 03/13/2001 CIA-RDP86-00513R001135820007-4

S/276/63/000/001/027/028
A006/A101

AUTHORS: Gruszczyński, Leszek, Mydlarz, Ignacy, Beldzik, Bernard

TITLE: Drawing roll stand for continuous steel casting

PERIODICAL: Referativnyy zhurnal, Tekhnologiya mashinostroyeniya, no. 1, 1963, 38, abstract 10259 P [(Biuro Projektów Przemysłu Hutniczego "Biprohut") Polish patent, cl. 31c, 21, no.44550, of June 28, 1961]

TEXT: The patented design (see Figure) is operated by a hydraulic cylinder 5, whose body and piston rod are connected by hinges with the ends of levers 4; between the levers there is a gearing 8. When the levers 4 rotate around axes 6, the levers 3 connected with them by hinges, are also rotated. Drawing rolls 2 placed in the bearings of the latter clamp or release the cast blank 9. The advantages of the patented system are: the extraction of the casting does not require its dropping below the roll level; the supply of both rolls to the blank is synchronous; this prevents skewing of the blank in respect to the crystallizer axis.

[Abstracter's note: Complete translation] V. Palestin

Card 1/2

APPROVED FOR RELEASE: 03/13/2001 CIA-RDP86-00513R001135820007-4"

"APPROVED FOR RELEASE: 03/13/2001 CIA-RDP86-00513R001135820007-4

3/216/63/000/001/021/026
A006/A101

Drawing roll stand for continuous steel casting

Figure.

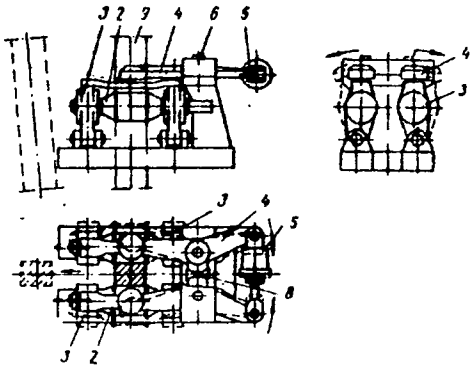

Card 2/2

APPROVED FOR RELEASE: 03/13/2001 CIA-RDP86-00513R001135820007-4"

"APPROVED FOR RELEASE: 03/13/2001 CIA-RDP86-00513R001135820007-4

1121. **Vertebrotherapy in discogenic lumboischialgia at sulphur baths** Subak vábna vertebroterapia pri diskogennej lumboischialgii v sírnych termách. Mydlík F. Čs. Státne Kúpele, Trenčianske Teplice *Fysiat. Vestn.* 1958, 36 5 (301-303) Illus. 2

In disturbances of the intervertebral discs and subsequent ischialgia, the authors use traction of the vertebral column, performed in a thermal bath of sulphur water. Physical effects (particularly decrease of the body weight and facilitation of movement) are combined with the specific effect of mineral water and the influence of heat. The therapeutic results, particularly with respect of alleviation of pain, are very promising, and therefore the methods are being further elaborated.

APPROVED FOR RELEASE: 03/13/2001 CIA-RDP86-00513R001135820007-4"

"APPROVED FOR RELEASE: 03/13/2001 CIA-RDP86-00513R001135820007-4

MYDLIK, T.; LISHKA, S. [Liska, S]; VEYSER, L. [Weiser, L.] (Chekhoslovakiya)

Use of a new kinesiological indicator in the evaluation of the effectiveness of some methods of health resort treatment of patients with the lumbar ischialgic syndrome. Vop.kur.,fizioter. i lech. fiz.kul't. 27 no.5:393-397 S-O'62. (MIRA 16:9)

1. Iz vosstanovitel'skogo otdeleniya kurorta Trenchanske Teplitse (glavnyy vrach T.Mydlik, dir. kurorta L.Spishka).
(CHECHOSLOVAKIA--PHYSICAL THERAPY) (SPINE--DISEASES)

APPROVED FOR RELEASE: 03/13/2001 CIA-RDP86-00513R001135820007-4"

"APPROVED FOR RELEASE: 03/13/2001 CIA-RDP86-00513R001135820007-4

Mydlil, B.

Blood proteins in infants from a quantitative and qualitative point of view. J. Homolka and B. Mydlil (Isc Children's Clinic, Prague). *Ann. Paediat.* 185, 129-41(1955); cf. *C.A.* 49, 4770f.—The blood proteins from infants were sepd. by paper electrophoresis and the ability of each of the fractions to undergo denaturation was detd. polarographically. The relative lability of a fraction is defined as the increase in area of the polarogram of that fraction after denaturation. The max. lability of a fraction is obtained by multiplying the relative lability by the relative percent of the fraction. Both of these values are considerably higher in a healthy child as compared to a sick child. These qual. changes of proteins precede quant. changes. A survey of normal values is given. R. K. Burkhard

APPROVED FOR RELEASE: 03/13/2001 CIA-RDP86-00513R001135820007-4"

"APPROVED FOR RELEASE: 03/13/2001 CIA-RDP86-00513R001135820007-4

MYDLIL, F.

Treatment of intestinal tuberculosis with streptomycin. Gastroenterologia bohema 4 no.5-6:294-302 Dec 50. (CLML 20:6)

1. Sanatorium in Zamberg.

APPROVED FOR RELEASE: 03/13/2001 CIA-RDP86-00513R001135820007-4"

"APPROVED FOR RELEASE: 03/13/2001 CIA-RDP86-00513R001135820007-4

MYDLIL, F., Dr.; KRATKY, P., Dr.

Present status of therapy of pulmonary cavities with antituberculotics. Prakt. lek., Praha 35 no.15-16: 360-361 20 Aug 55.

1. Sanatorium Zamberk Poznamky k clanku Dr. L. Trnky: Konservativni kombinovana lecba velkokavernosniho tbc procesu. Prakt. lekar 23, 532, 1954.

(TUBERCULOSIS, PULMONARY, pathology
cavitations, ther., isoniazid, PAS & streptomycin, alone & in combination.)
(NICOTINIC ACID ISOMERS, ther. use
isoniazid in pulm. tuberc. with cavitations, alone & with streptomycine & PAS)
(PARA-AMINOSALICYLIC ACID, ther. use
tuberc., pulm. with cavitations, alone & with isoniazid & streptomycine)
(STREPTOMYCINE, ther. use
tuberc. pulm. with cavitations, alone & with isoniazid & PAS)

APPROVED FOR RELEASE: 03/13/2001 CIA-RDP86-00513R001135820007-4"

"APPROVED FOR RELEASE: 03/13/2001 CIA-RDP86-00513R001135820007-4

PROCHAZKA, Jar.; VORTEL, V.; MYDLIL, F.

Malignant bronchial adenoma. Cas. lek. cesk. 95 no.37: 1005-1008 14 Sept 56.

1. Chirurgicka klinika VLA J. Ev. Putkyne, prednosta akademik J. Bedrna, patholog. anatom. ustav, prednosta prof. Dr. A. Fingerland a plicni lecebna v Zamberku, prednosta prim. Dr. F. Mydlil.
(BRONCHI, neoplasms
differ. diag. from middle lobe synd., case report (Cz))
(ATELECTASIS, differ. diag.
middle lobe synd. from bronchial adenoma, case report (Cz))

APPROVED FOR RELEASE: 03/13/2001 CIA-RDP86-00513R001135820007-4"

"APPROVED FOR RELEASE: 03/13/2001 CIA-RDP86-00513R001135820007-4

PROKHAZKA, Ya. [Procházka, J.], dotsent, doktor meditsiny; MYDLIL, F., doktor meditsiny; KREYZEK, M., doktor meditsiny; BRZEK, V., doktor meditsiny; KRATKIY, P. doktor meditsiny; MEZENSKIY, L.

Resection of the lungs in tuberculosis. Vest.khir. 83 no.10:23-29 O '59. (MIRA 13:2)

1. Iz khirurgicheskoy kliniki (Gradets Kralove) i tuberkuleznoy lechebnitsy (Zhamberg). Adres avtorov: dotsent Dr. J. Prochazka - chirurgicka klinika Hradec Kralove; MUDr. F. Mydlil - reditel tbc lecebny, Zamberk.

(PNEUMONECTOMY statistics)

APPROVED FOR RELEASE: 03/13/2001 CIA-RDP86-00513R001135820007-4"

"APPROVED FOR RELEASE: 03/13/2001 CIA-RDP86-00513R001135820007-4

MYDLIL, Fr.; PROCHAZKA, J.

Hemorrhagic infarction and necrosis of the pulmonary tissue after segmental resection. Cas. lek. cesk. 99 no. 25:776-780 17 Je '60.

1. Plicni lecebne v Zamberku, reditel dr. Franitsek Mydlil, Chirurgiska klinika KU v Hradci Kralove, prednosta dr. Jaroslav Prochazka.
(PNEUMONECTOMY compl.)

APPROVED FOR RELEASE: 03/13/2001 CIA-RDP86-00513R001135820007-4"

"APPROVED FOR RELEASE: 03/13/2001 CIA-RDP86-00513R001135820007-4

APPROVED FOR RELEASE: 03/13/2001 CIA-RDP86-00513R001135820007-4"

"APPROVED FOR RELEASE: 03/13/2001 CIA-RDP86-00513R001135820007-4

APPROVED FOR RELEASE: 03/13/2001 CIA-RDP86-00513R001135820007-4"

"APPROVED FOR RELEASE: 03/13/2001 CIA-RDP86-00513R001135820007-4

MYDLIL, F.; PROKHAZKA, Ya. [Prochazka, J.]; KREYZEK, M. [Kreizek, M.]; PAVLOV, B. (Chekhoslovatskaya Sotsialisticheskaya Respublika)

Results of treating tuberculous patients for the past 20 years (1940-1959). Probl.tub. no.1:60-62 '62. (MIRA 15:8)

1. Iz tuberkuleznoy lechebnitsy v Zhamberge (dir. F. Mydlil) i khirurgicheskoy kliniki v Gradets Kralove (rukovoditel' - prof. Ya. Prokhazka).

(TUBERCULOSIS)

APPROVED FOR RELEASE: 03/13/2001 CIA-RDP86-00513R001135820007-4"

"APPROVED FOR RELEASE: 03/13/2001 CIA-RDP86-00513R001135820007-4

MYDLIL, Frantisek, inz.; BARTL, Vladimir, dr.

Microbiological control of cosmetics. Prum potravin 13 no.6: 303-304 Je '62.

1. Statni inspekce jakosti potravinarskych vyrobku, Praha.

APPROVED FOR RELEASE: 03/13/2001 CIA-RDP86-00513R001135820007-4"

"APPROVED FOR RELEASE: 03/13/2001 CIA-RDP86-00513R001135820007-4

MYDLIL, F.

2

CZECHOSLOVAKIA

MYDLIL, F; PROCHAZKA, J; KREJBICHOVA, B.

1. Tuberculosis Sanatarium (Lecebna tuberkulozy), Zamberk; 2. Surgical Clinic of the Medical Faculty KU (Chirurgicka klinika lekarske fakulty KU), Hradec Kralovy - (for all)

Prague, Rozhledy v tuberkulose, No 4, 1963, pp 266-272

" Relapses after Pulmonary Resection for Tuberculosis which Took Place 5 to 12 Years Ago."

APPROVED FOR RELEASE: 03/13/2001 CIA-RDP86-00513R001135820007-4"

"APPROVED FOR RELEASE: 03/13/2001 CIA-RDP86-00513R001135820007-4

CZECHOSLOVAKIA

MYDLIL, F., MD; MEZENSKY, L.

Lung Sanatarium (Plicni lecebna), Zamberk (for both)

Prague, Rozhledy v tuberkulose, No 5, 1963, pp 292-298

"Treatment Results with Minor Antituberculous Drugs Obtained in Patients Resistant to Major Drugs."

APPROVED FOR RELEASE: 03/13/2001 CIA-RDP86-00513R001135820007-4"

"APPROVED FOR RELEASE: 03/13/2001 CIA-RDP86-00513R001135820007-4

MYDLIL, Frantisek, inz.

Development and control of the food product quality. Prum potravin 15 no.11:540-542 N '64.

1. State Inspection of Food Industry Product Quality, Prague.

APPROVED FOR RELEASE: 03/13/2001 CIA-RDP86-00513R001135820007-4"

"APPROVED FOR RELEASE: 03/13/2001 CIA-RDP86-00513R001135820007-4

[illegible]

Uniform method of evaluation as a [illegible] for [illegible] food product [illegible]. [illegible] potravin [illegible]

. State Institute of Food Industry Product [illegible]

APPROVED FOR RELEASE: 03/13/2001 CIA-RDP86-00513R001135820007-4"

"APPROVED FOR RELEASE: 03/13/2001 CIA-RDP86-00513R001135820007-4

CZECHOSLOVAKIA

FINGERLAND, A., Prof Dr, Dr of Scien; MYDLIL, F., MD; PROCHAZKA, J., Prof Dr.

1. Pathological-Anatomical Medical Faculty KU (Patologickoanatomicky ustav lekarske fakulty KU), Hradec Kralovy (for Fingerland); 2. Surgical Clinic of the Medical Faculty KU (Chirurgicka klinika lekarske fakulty KU), Hradec Kralovy (for Prochazka); 3. Lung Sanatarium (Plicni lecebna), Zamberk (for Mydlil)

Prague, Rozhledy v tuberkulose, no 5, 1963, pp 299-305

"Contribution to the Problem of Differential Diagnosis of Pulmonary Cavities."

APPROVED FOR RELEASE: 03/13/2001 CIA-RDP86-00513R001135820007-4"

"APPROVED FOR RELEASE: 03/13/2001 CIA-RDP86-00513R001135820007-4

STEPANEK, Pavel; MYDLIL, Frantisek, MUDr.; KOPECNY, Jaroslav; BRZEK, Vladimir

Decortication of the lungs during resection for tuberculosis and histological examination of the pleura. Sborn. ved. prac. lek. fak. Karlov. Univ. 9 no.1:147-154 '64.

1. Plicni lecebna v Zamberku Obvodniho ustavu narodniho zdravi Usti n. Orl. (reditel: MUDr. F. Mydlil); Patologicko-anatomicky ustav (prednosta: prof. MUDr. A. Fingerland, DrSc) a Chirurgicka klinika (prednosta: prof. MUDr. J. Prochazka, DrSc.) Karlovy University v Hradci Kralove.

APPROVED FOR RELEASE: 03/13/2001 CIA-RDP86-00513R001135820007-4"

"APPROVED FOR RELEASE: 03/13/2001 CIA-RDP86-00513R001135820007-4

MYDLIL, Frantisek; PROCHAZKA, Jaroslav; KREJZEK, Miroslav; PATOCKOVA, Vera

Recurrences after lung resection for tuberculosis, 5 to 12 years following the operation, in 440 patients. Sborn. ved. prac. lek. fak. Karlov. univ.: Suppl. 8 no.5:513-523 '65.

1. Plicni lecebna v Zamberku (prednosta MUDr. F. Mydlil) a Chirurgicka klinika (prednosta prof. MUDr. J. Prochazka, DrSc.).

APPROVED FOR RELEASE: 03/13/2001 CIA-RDP86-00513R001135820007-4"

"APPROVED FOR RELEASE: 03/13/2001 CIA-RDP86-00513R001135820007-4

CZECHOSLOVAKIA VOC 616.24-002.5-089:616.131-008

Pa[illegible] V. V.; MYDLIL, F.; Research Institute of Experimental Therapy (Vyzkumny ustav Experimentalni Terapie), Prague, Director (Reditel) Prof Dr O. SKAVNIK; Lung Hospital (Plicni Lecebna) Zamberk, Director (Reditel) Dr F. MYDLIL.

"Hemodynamic Changes in Surgical Treatment of Pulmonary Tuberculosis."

Prague, Casopis Lekaru Ceskych, Vol 105, No 47, 25 Nov 66, pp 1[illegible] - 1[illegible]

Abstract [Authors' English summary modified]: A long-term investigation of [illegible] patients with pulmonary TB is described; the influence of surgical treatment on the lesser blood circulation system, and the factors leading to the development of cor pulmonale were studied. When the operation is the only hope of saving the patient, pulmonary hypertension is not an absolute contraindication. Detailed hemodynamic examination should be made before every extensive lung operation. 6 Figures, 6 Western, 3 Czech references. (Manuscript received Feb 66).

1/1

APPROVED FOR RELEASE: 03/13/2001 CIA-RDP86-00513R001135820007-4"

"APPROVED FOR RELEASE: 03/13/2001 CIA-RDP86-00513R001135820007-4

MYDLIL, V., GOSTOF, R.

Certain aspects in the microsedimentation in newborn and premature. Pediat. listy 5:3, May-June 50. p. 171-2

1. Of the First Children's Clinic of Prof. Svejcar in Prague.

CLML 19, 5, Nov., 1950

APPROVED FOR RELEASE: 03/13/2001 CIA-RDP86-00513R001135820007-4"

"APPROVED FOR RELEASE: 03/13/2001 CIA-RDP86-00513R001135820007-4

ZELENKA, J.; KUCEROVA, M.; MYDLIL, V.

Treatment of grave pneumonia in child with chloromycetin. Pediat. listy 6 no.1: Jan-Feb 51. (CLML 20:7)

1. Of the First Children's Clinic of Prof. Svejcar in Prague.

APPROVED FOR RELEASE: 03/13/2001 CIA-RDP86-00513R001135820007-4"

"APPROVED FOR RELEASE: 03/13/2001 CIA-RDP86-00513R001135820007-4

HNATEK, J., Dr.; MYDLIL, V., Dr.

Effect of war damages on the development of dystrophic and atrophic children examined at the First Pediatric Clinic in Prague. Cas.lek. cesk. 91 no.42:1199-1201 17 Oct. 52.
1. Z I. detske kliniky v Praze. Prednosta: prof. dr. J.Svejcar.
(INFANT NUTRITION DISORDERS, statistics,
in Czech., analysis of cond. before, during & after World War II)

APPROVED FOR RELEASE: 03/13/2001 CIA-RDP86-00513R001135820007-4"

"APPROVED FOR RELEASE: 03/13/2001 CIA-RDP86-00513R001135820007-4

MYDLIL, V.

MYDLIL, V.; VALIK, A.; POLACEK, E.

Intestinal paresis in acute infantile diarrhea. Pediat. listy 9 no.2:92-94 Ap '54.

1. Z I. detske kliniky, prednosta prof. Dr J.Svejcar, a z III. detske kliniky, prednosta doc. Dr Vychytil.
(DIARRHEA, in infant and child,
*compl., intestinal paresis)
(INTESTINES, paralysis,
*in inf. diarrhea)
(PARALYSIS,
*intestines, in inf. diarrhea)

APPROVED FOR RELEASE: 03/13/2001 CIA-RDP86-00513R001135820007-4"

"APPROVED FOR RELEASE: 03/13/2001 CIA-RDP86-00513R001135820007-4

MYDLIL, V.

VALIK, A., DR; MYDLIL, V.

Practical considerations on the treatment of nutritional disorders and acute diarrheas. Pediat. listy 9 no.2:100-101 Ap '54.

1. III. detska klinika. I. Detska klinika, Praha.
(DIARRHEA, in infant and child,
*ther.)
(INFANT NUTRITION DISORDERS, therapy,)
*

APPROVED FOR RELEASE: 03/13/2001 CIA-RDP86-00513R001135820007-4"

"APPROVED FOR RELEASE: 03/13/2001 CIA-RDP86-00513R001135820007-4

MYDLIL, V.

Blood-protein picture in diarrhea of infants in comparison with other diseases. J. Homolka and V. Mydlil (1st Children's Clinic, Prague). *Ann. Paediat.* 185, 142-9 (1955); cf. *C.A.* 49, 4770*f*.—Examn. of the compn. of blood-protein fractions in severe diarrhea of infants showed that the albumin decreases, the α-globulin increases, but the γ-globulin shows little change. In other severe disorders, decreased albumin and increased γ-globulin were found. In light diarrheas and other light diseases the compn. of the blood-protein fractions was normal, but the quality of the fractions detd. by the electrophoretic-polarographic method were changed. R. K. Burkhard

ND

(1)

APPROVED FOR RELEASE: 03/13/2001 CIA-RDP86-00513R001135820007-4"

"APPROVED FOR RELEASE: 03/13/2001 CIA-RDP86-00513R001135820007-4

HOMOLKA, J.; MYDLIL, V.

Influence of saline infusions on composition of blood proteins. Cesk. pediat. 11 no.8:613-616 Aug 56.

1. I. detska klin., predn. prof. Dr. J. Svejcar. Ustredni biochem. laborator detske fakultni nemoc., predn. Dr. J. Homolka.
(SALTS, eff.
saline infusions on composition of blood proteins (Cz))
(BLOOD PROTEINS, eff. of drugs on
saline infusions on composition of (Cz))

APPROVED FOR RELEASE: 03/13/2001 CIA-RDP86-00513R001135820007-4"

"APPROVED FOR RELEASE: 03/13/2001 CIA-RDP86-00513R001135820007-4

HOMOLKA, J.; MYDLIL, V.; Technicka spoluprace: MOJZIS, J.; HAASOVA, E.

Quantitative and qualitative considerations on blood proteins in children. Cas. lek. cesk. 95 no.5:113-118 3 Feb 56.

1. Z. I. detske kliniky v Praze, prednosta prof. Dr. J. Svejcar.
(BLOOD PROTEINS, determination,
in child., qualitative & quantitative aspects.
(Cz))

APPROVED FOR RELEASE: 03/13/2001 CIA-RDP86-00513R001135820007-4"

"APPROVED FOR RELEASE: 03/13/2001 CIA-RDP86-00513R001135820007-4

HOMOLKA, J.; MYDLIL, V.; Technicka spoluprace: MOJZIS, J.; HAASOVA, E.

Comparison of blood proteins in diarrhea and in other conditions in children. Cas. lek. cesk. 95 no.5:118-121 3 Feb 56.

1. Z I. detske kliniky, prednosta prof. Dr. J. Svejcar.
(DIARRHEA, in infant and child,
blood proteins in, comparison with other cond.(Cz))
(BLOOD PROTEINS, in various diseases,
diarrhea in child., comparison with other pathol. cond. (Cz))

APPROVED FOR RELEASE: 03/13/2001 CIA-RDP86-00513R001135820007-4"

"APPROVED FOR RELEASE: 03/13/2001 CIA-RDP86-00513R001135820007-4

Korecky, B.; VAVRA, J.; MYDILIL, V.

Simplified construction for body plethysmograph for newborn and small infants. Cesk.fysiol. 9 no.6:559-561 N '60.

1. Oddeleni patofysiologie fak.detsk.lek. KU, Laborator fysiologie a patofysiologie premeny latek CSAV, I. detska klinika lek.fak. KU, Praha.

(PLETHYSMOGRAPHY equip & supply)

APPROVED FOR RELEASE: 03/13/2001 CIA-RDP86-00513R001135820007-4"

"APPROVED FOR RELEASE: 03/13/2001 CIA-RDP86-00513R001135820007-4

MYDLIL, V.; VAVRA, J.; KORECKY, B.

Investigation of the respiratory rate of the tidal and minute volume by the mask method and by a body plethysmograph in newborn infants. Acta univ. carol.[Med] no.2:195-202 '61.

1. I detska klinika fakulty detskeho lekarstvi University Karlovy, prednosta prof. MUDr. J. Svejcar Oddeleni patologicke fysiologie fakulty detskeho lekarstvi University Karlovy, prednosta doc. MUDr. V. Zelenka.

(PLETHYSMOGRAPHY in inf & child)
(RESPIRATION in inf & child)
(INFANT NEWBORN physiol)

APPROVED FOR RELEASE: 03/13/2001 CIA-RDP86-00513R001135820007-4"

"APPROVED FOR RELEASE: 03/13/2001 CIA-RDP86-00513R001135820007-4

MYDLIL, V.; VAVRA, J.

Loss of water by respiration and its relation to ventilation of newborn infants. Acta univ. carol.[Med] no.2:231-238 '61.

1. I detska klinika fakulty detskeho lekarstvi University Karlovy prednosta prof. MUDr. J. Svejcar.

(INFANT NEWBORN physiol)
(RESPIRATION in inf & child)
(DEHYDRATION in inf & child)

APPROVED FOR RELEASE: 03/13/2001 CIA-RDP86-00513R001135820007-4"

"APPROVED FOR RELEASE: 03/13/2001 CIA-RDP86-00513R001135820007-4

MYDLIL, V.; VAVRA, Ya.

Study of the respiratory rate, and respiratory and minute pulmonary volume in healthy newborn infants by the mask and plethysmographic method. Pediatriia 39 no.1:60-63 '61. (MIRA 14:1)

1. Iz 1-y detskoy kliniki (zav. - prof. Shveytsar) i otdeleniya eksperimental'noy patologii (zav. - dotsent V. Zelenka) (Chekhoslovakiya).

(INFANTS (NEWBORN)) (RESPIRATION)

APPROVED FOR RELEASE: 03/13/2001 CIA-RDP86-00513R001135820007-4"

"APPROVED FOR RELEASE: 03/13/2001 CIA-RDP86-00513R001135820007-4

MYDLIL, Vaclav; VAVRA, Jan

Measurement of the ventilation activity in newborn infants. Cesk. pediat. 17 no.5/6:290-294 Je '62.

1. Katedra nemocnicni pediatrie fakulty detskeho lekarstvi University Karlovy v Praze, vedouci prof. MUDr. J. Svejcar, DrSc.

(RESPIRATION in inf & child)
(INFANT NEWBORN dis physiol)

APPROVED FOR RELEASE: 03/13/2001 CIA-RDP86-00513R001135820007-4"

"APPROVED FOR RELEASE: 03/13/2001 CIA-RDP86-00513R001135820007-4

GUTVIRTH, J.; CHODERA, J.; KOCI, M.; MYDLIL, V.

Registration of respiratory movements in premature infants by induction changes. Cesk. pediat. 17 no.11:280-284 N '62.
(RESPIRATORY FUNCTION TESTS) (INFANT NEWBORN)

APPROVED FOR RELEASE: 03/13/2001 CIA-RDP86-00513R001135820007-4"

"APPROVED FOR RELEASE: 03/13/2001 CIA-RDP86-00513R001135820007-4

CZECHOSLOVAKIA

RASKA, B., MASCPUST, J., and MYDLIL, V., First Clinic of Pediatrics (1. detska klinika), Faculty of Pediatrics (Fakulta detskeho lekarstvi), Charles University, Prague, Prof. J. SVEJCAR, MD, director; and Institute for the Research of Child Development (Ustav pro vyzkum vyvoje ditete), Prague, Prof. J. HOUSTEK, MD, director.

"Etiology of Idiopathic Hypoproteinemia in Children"

Prague, Casopis Lekaru Ceskych, Vol CII, No 36, 6 September 63, pp 986-992.

Abstract [Authors' English summary]: A report on seven children suffering from idiopathic hypoproteinemia (two died) and a new explanation of the etiology as an increased elimination of plasma proteins into the intestinal tract, the so-called exsudative enteropathy. Plasmatic proteins were found in excrements by means of electrophoresis and immunoprecipitation. They also were found in excrements of persons with acute coeliakia, mucoviscidosis, and severe dyspepsia. Forty references, including 3 Czech and 1 Polish.

1/1

APPROVED FOR RELEASE: 03/13/2001 CIA-RDP86-00513R001135820007-4"

"APPROVED FOR RELEASE: 03/13/2001 CIA-RDP86-00513R001135820007-4

VAVRA, J.; MYDLIL, V.

Influence of chlorpromazine on ventilation and oxygen consumption in newborn infants. Rev. Czech. med. 9 no.3:189-196 '63.

1. Chair of Hospital Paediatrics, Paediatric Faculty, Charles University, Prague. Director: Prof. J. Svejcar, M.D., D.Sc.
(CHLORPROMAZINE) (RESPIRATION)
(ENERGY METABOLISM) (RESPIRATORY FUNCTION TESTS)

APPROVED FOR RELEASE: 03/13/2001 CIA-RDP86-00513R001135820007-4"

"APPROVED FOR RELEASE: 03/13/2001 CIA-RDP86-00513R001135820007-4

VAVRA,J.; MYDLIL, V.

Analysis of ventilation mechanics in premature infants. Cesk. pediat. 18 no.12:1057-1063 D'63.

1. Katedra nemocnicni pediatrie fakulty detskeho lekarstvi KU v Praze; vedouci: prof.dr. J.Svejcar, DrSc.

APPROVED FOR RELEASE: 03/13/2001 CIA-RDP86-00513R001135820007-4"

"APPROVED FOR RELEASE: 03/13/2001 CIA-RDP86-00513R001135820007-4

RASKA, B.; MASOPUST, J.; MYDLIL, V.

Contribution to the etiology of idiopathic hypoproteinemia in children. Cas. lek. cesk. 102 no.36:986-992 6 S '63.

1. I detska klinika fakulty detskeho lekarstvi KU v Praze, prednosta prof. dr. J. Svejcar Ustav pro vyzkum vyvoje ditete v Praze, prednosta prof. dr. J. Houstek.

(BLOOD PROTEIN DISORDERS) (CELIAC DISEASE)
(PANCREATIC CYSTIC FIBROSIS) (DYSPEPSIA)
(FECES)

APPROVED FOR RELEASE: 03/13/2001 CIA-RDP86-00513R001135820007-4"

"APPROVED FOR RELEASE: 03/13/2001 CIA-RDP86-00513R001135820007-4

MYDLIL, V.; VAVRA, J.

Importance of determining the respiratory rate in premature infants. Cesk. pediat. 19 no.9:828-836 1 '64.

1. Katedra nemocnicni pediatrie fakulty detskeho lekarstvi v Praze, (vedoucí prof. dr. J. Svejcar).

APPROVED FOR RELEASE: 03/13/2001 CIA-RDP86-00513R001135820007-4"

"APPROVED FOR RELEASE: 03/13/2001 CIA-RDP86-00513R001135820007-4

MYDLIL, V.; VAVRA, J.

Some peculiarities of ventilation in premature infants. Cesk. pediat. 20 no.3:280-285 Mr '65

Some ventilatory values in the respiratory distress syndrome of premature infants. Ibid.:286-289

1. Faculty of Paediatrics, Charles University, Prague.

APPROVED FOR RELEASE: 03/13/2001 CIA-RDP86-00513R001135820007-4"

"APPROVED FOR RELEASE: 03/13/2001 CIA-RDP86-00513R001135820007-4

MYDLIL, V.; VAVRA, J.

Significance of investigations of the respiratory rate in premature infants. [illegible]

1. First Paediatric [illegible], Charles University, [illegible] (Director: Prof. J. Svehlik, M.D., [illegible]

APPROVED FOR RELEASE: 03/13/2001 CIA-RDP86-00513R001135820007-4"

"APPROVED FOR RELEASE: 03/13/2001 CIA-RDP86-00513R001135820007-4

[illegible] : [illegible]

[illegible] : Cultivated Plants - Fruitbee Vegetables, Gourds [illegible]

[illegible] : [illegible]

[illegible] : Kymrov, [illegible]

[illegible] : Application of some synthetic chemical preparations [illegible] increasing [illegible] yields by means of the spraying of flowers.

[illegible] : Gyrosnabarsiya i gradirovanie, [illegible]

[illegible] : Results of [illegible] experiments on increasing tomato yields in the [illegible] in [illegible] under [illegible] conditions at the Labor Cooperative "[illegible] Chernyakov" [illegible] means of artificial pollination of flowers and spraying of plants with synthetic preparations having auxin-like effect, D_1, D_2, D_3, D_4 and with "tomafika", inducing development of parthenocarpellary fruits. Maximum yield of ripe fruit (39.3% compared to the control) was obtained by spraying with D_4 every three days during the period of blossoming. Spraying with "tomafika" produced up to 291.1% yield of the

Card: 1/2

APPROVED FOR RELEASE: 03/13/2001 CIA-RDP86-00513R001135820007-4"

"APPROVED FOR RELEASE: 03/13/2001 CIA-RDP86-00513R001135820007-4

COUNTRY : BULGARIA
CATEGORY : Cultivated Plants - Potatoes, Vegetables, Cucurbits. M

ABS. JOUR. : RZhBiol., No.1, 1958, No. 6444

AUTHOR :
INST. :
TITLE :

PUB. DATE :

ABSTRACT : fruit and spraying with "tomflias" in combination with the artificial pollination of the flowers - 267.24. Favorable results were also obtained with spraying with solutions of 2,4-D, α-naphthylacetic acid and others. -- V. S. Shmal'ko

Card: 2/2

APPROVED FOR RELEASE: 03/13/2001 CIA-RDP86-00513R001135820007-4"

"APPROVED FOR RELEASE: 03/13/2001 CIA-RDP86-00513R001135820007-4

MYFTIU, A.

MYFTIU, A. How to reduce costs in milk production. p.25.

Vol. 10, No. 5, May 1956, PER BUJQESINE SOCIALISTE, Tirane, Albania.

SO: Monthly List of East European Accessions, (EEAL), LC, Vol. 5, No. 10, Oct. 1956.

APPROVED FOR RELEASE: 03/13/2001 CIA-RDP86-00513R001135820007-4"

"APPROVED FOR RELEASE: 03/13/2001 CIA-RDP86-00513R001135820007-4

MYFTIU, M.

"The address of greeting of the Central Committee of the Workers Party of Albania and Albanian Government on the occasion of the founding of the State University of Tirane"

Buletin. Seria Shkencat Natyrore. Tirane, Albania. Vol. 11, no. 2, 1957

Monthly list of East European Accessions (EEAI), LC, Vol. 8, No. 6, Jun 59, Unclas

APPROVED FOR RELEASE: 03/13/2001 CIA-RDP86-00513R001135820007-4"

"APPROVED FOR RELEASE: 03/13/2001 CIA-RDP86-00513R001135820007-4

MYGA, Mieczyslaw, inz.

Capital investments in nonferrous metallurgy during the 20 year period of the Polish People's Republic. Rudy i metale 9 no.7: 366-370 Jl '64.

APPROVED FOR RELEASE: 03/13/2001 CIA-RDP86-00513R001135820007-4"

"APPROVED FOR RELEASE: 03/13/2001 CIA-RDP86-00513R001135820007-4

YEKISENINA, N.I.; MYGKOVA, L.P.; GINDINA, N.I.; SATAROVA, A.G.; TSERENNADMID, Ch.; SVETOVIDOVA, V.M.; POLYANICHKO, M.F.; TANKOV, P.I. (Sochi); BELOSLYUD, Ye.G.; SVERSHKOV, A.N.

Brief news. Sov. med. 28 no.5:151-153 My '65. (MIRA 18:5)

1. Klinika lechebnogo pitaniya Instituta pitaniya AMN SSSR, Moskva (for Yekisenina, Myagkova, Gindina). 2. Kafedra infektsionnykh bolezney 1-go Leningradskogo meditsinskogo instituta imeni akademika Pavlova (for Satarova). 3. Kafedra laboratornoy klinicheskoy diagnostiki TSentral'nogo instituta usovershenstvovaniya vrachey i I klinicheskaya bol'nitsa, Ulan-Bator (for TSerennadmid). 4. Saratovskiy nauchno-issledovatel'skiy institut travmatologii i ortopedii (for Svetovidova). 5. Khirurgicheskoye otdeleniye mediko-sanitarnoy chasti zavoda "Krasryy Oktyabr'", Volgograd (for Beloslyud). 7. Iz Ukrainskogo nauchno-issledovatel'skogo instituta kommunal'noy gigiyeny (for Sverchkov).

APPROVED FOR RELEASE: 03/13/2001 CIA-RDP86-00513R001135820007-4"

"APPROVED FOR RELEASE: 03/13/2001 CIA-RDP86-00513R001135820007-4

MYJAK, Przemyslaw

Multiple division of the nucleus in Entamoeba histolytica, in culture. Preliminary report. Bull. inst. mar. med. Gdansk 16 no.1:41-42 '65.

1. From the Institute of Marine Medicine in Gdansk.

APPROVED FOR RELEASE: 03/13/2001 CIA-RDP86-00513R001135820007-4"

"APPROVED FOR RELEASE: 03/13/2001 CIA-RDP86-00513R001135820007-4

MYKAL, G., podpolkovnik

Airplanes take off from the bare earth. Tyl i snab.Sov.Voor.Sil 21 no.3:67-70 Mr '61. (MIRA 14:6)

(Airports)

APPROVED FOR RELEASE: 03/13/2001 CIA-RDP86-00513R001135820007-4"

"APPROVED FOR RELEASE: 03/13/2001 CIA-RDP86-00513R001135820007-4

L 45148-66 EWT(m)/EWT(1)/EWT(d)/T/EWP(h)/EWP(1) TT/WE

ACC NR: AP6025302 SOURCE CODE: UR/0416/66/000/007/0074/0078

20
19
13

AUTHOR: Mykal, G., (Lieutenant Colonel)

ORG: none

TITLE: Improvement of ground and technical servicing of flights

SOURCE: Tyl i snabzheniye sovetskikh vooruzhennykh sil, no. 7, 1966, 74-73

TOPIC TAGS: airfield equipment, fuel pump, ground servicing

ABSTRACT: The author describes the improvements made in airfield servicing in order to keep abreast with the new development of an expanded aviation. Facilities for fuel transportation and low-power pumps have been replaced by high-power stationary pumps, (TsSP-51 pumps with 50-kw electric motors) which are included in the general network of tanks and pumping stations. FGT-type filters are installed for the filtration of fuel for the simultaneous servicing of several filling units. New units have been provided for a constant supply of power of the voltage required.

Card 1/2

APPROVED FOR RELEASE: 03/13/2001 CIA-RDP86-00513R001135820007-4"

"APPROVED FOR RELEASE: 03/13/2001 CIA-RDP86-00513R001135820007-4

L 45148-66

ACC NR: AP6025302

The author advocates further improvements in preventive maintenance of aircraft ant other ground facilities, such as power supply system for aircraft parking areas. He believes that stationary 500-kw electric systems would pay for themselves within 1.5—2 years. [DW]

SUB CODE: 01/ SUBM DATE: none/

Card 2/2

APPROVED FOR RELEASE: 03/13/2001 CIA-RDP86-00513R001135820007-4"

"APPROVED FOR RELEASE: 03/13/2001 CIA-RDP86-00513R001135820007-4

MYKHAILENKO, I.O.

Production of rennet fermented cheese with the continuous method. Kharch.prom. no.4:3-4 O-D '63. (MIRA 17:1)

APPROVED FOR RELEASE: 03/13/2001 CIA-RDP86-00513R001135820007-4"

"APPROVED FOR RELEASE: 03/13/2001 CIA-RDP86-00513R001135820007-4

ACC NR: AP7001846 SOURCE CODE: UR/0021/66/000/012/1545/1547

AUTHOR: Mykhaylov, V. V.

ORG: Physicotechnical Institute of Low Temperatures, Academy of Sciences, UkrSSR (Fizyko-tekhnichnyy instytut niz'kykh temperatur AN URSR)

TITLE: On postcritical deformations of a cylindrical shell under external pressure

SOURCE: AN UkrSSR. Dopovidi, no. 12, 1966, 1545-1547

TOPIC TAGS: shell buckling, cylindric shell, buckling pressure, lower buckling pressure, upper buckling pressure, pressure effect

ABSTRACT: The magnitude of the lower critical pressure of a cylindrical shell exposed to constant external pressure is determined by a method developed by. A. V. Pogorelov (On the theory of convex elastic shells in the postcritical range (Izd-vo Khar'kovskiy gosudarstvennyy universitet, 1961), which is based on approximate determination of the shape of the middle surface of the shell in the state of elastic postbuckling equlibrium. It is assumed that geometrical flexure is the basic component of the postcritical deformation, and that the latter consists in further development of wave formation on the shell surface which starts at the instant of buckling. This shape of the deformed shell is approximated by a surface Z which is isometric to that of the given cylinder with accuracy up to a certain function of a single variable. This function is determined from the condition of the minimum of elastic-strain energy

Card 1/2

APPROVED FOR RELEASE: 03/13/2001 CIA-RDP86-00513R001135820007-4"

"APPROVED FOR RELEASE: 03/13/2001 CIA-RDP86-00513R001135820007-4

ACC NR: AP7001846

which is necessary to deform the given shell into the shape Z by a certain amount of work performed by the external load. The problem is solved for thin shells simply supported at face edges which satisfy the condition $R\delta/L^2 << 1$, where R, δ and L are the radius, thickness, and length of the shell, respectively. The formulas for determining the values of the lower and upper critical pressures are given, and the buckling behavior of the shell under these pressures is explained. Orig. art. has: 2 figures.

SUB CODE: 20/ SUBM DATE: 11Feb66/ ORIG REF: 003/ ATD PRESS: 5111

Card 2/2

APPROVED FOR RELEASE: 03/13/2001 CIA-RDP86-00513R001135820007-4"

"APPROVED FOR RELEASE: 03/13/2001 CIA-RDP86-00513R001135820007-4

L 01818-67 EWT(1)/T IJP(c) GG

ACC NR: AP6030803 SOURCE CODE: UR/0185/66/011/009/0978/0981 52

AUTHOR: Dutchak, Ya. Y. --Dutchak, Ya. I.; Mykolaychuk, O. H. -- Mikolaychuk, A. G.; Kogut, O. M. --Kogut, A. M.

ORG: Lvov State University im. I. Frank (L'vivs'kyy derzhuniversytet)

TITLE: Effect of x rays on the conductivity of thin HgS films

SOURCE: Ukrayins'kyy fizychnyy zhurnal, v. 11, no. 9, 1966, 978-981

TOPIC TAGS: radiation, photoconductivity, mercury sulfide, radiation dosimeter

ABSTRACT: A method is described for obtaining films of a trigonal modification of mercury sulfide by evaporation in vacuo of artificial α-HgS samples. The effect of x-rays on the conductivity of thin films was investigated. The radiation sources were tubes with anticathodes of Cr, Fe, Co, Cu, and Mo. The x-rays dose falling on the sample, was determined with a PM-1-M dosimeter. It was shown that the photocurrent value depends on the dose and wavelength of the characteristic radiation and increases with increasing wavelength. The continuous radiation of a short-wave spectrum does not substantially affect the photocurrent value. These data indicate that with a thin film, the photoconductivity of the sample is deter-

Card 1/2

APPROVED FOR RELEASE: 03/13/2001 CIA-RDP86-00513R001135820007-4"

"APPROVED FOR RELEASE: 03/13/2001 CIA-RDP86-00513R001135820007-4

L 01818-67

ACC NR: AP6030803

mined, first of all, by the linear absorption coefficient, and not by the quantum yield or the life of the current carrier. Orig. art. has: 3 figures. [Based on authors' abstract]

[NT]

SUB CODE: 20/ SUBM DATE: 16Dec65/ ORIG REF: 005/. OTH REF: 002/

Card 2/2 fv

APPROVED FOR RELEASE: 03/13/2001 CIA-RDP86-00513R001135820007-4"

"APPROVED FOR RELEASE: 03/13/2001 CIA-RDP86-00513R001135820007-4

L 05809-67 EWT(1)/EWT(m)/EWP(t)/ETI IJP(c) JD/GG

ACC NR: AR6031882 SOURCE CODE: UR/0058/66/000/006/E085/E086

AUTHOR: Mykolaychuk, O. H.; Bilen'kyy, B. F.; Kohut, O. M.

TITLE: Electrical and optical properties of thin GaSb films

SOURCE: Ref. zh. Fizika, Abs. 6E665

REF SOURCE: Visnyk L'vivs'k. un-tu. Ser. fiz., no. 2, 1965, 77-79

TOPIC TAGS: semiconductor, gallium antimonide, semiconductor film, thin film

ABSTRACT: GaSb films were prepared by vapor deposition in a $\sim 10^{-4}$ mm-Hg vacuum on glass substrates. Amorphous films were obtained on cold substrates. Structure ordering of the coatings and their crystallization occurred at temperatures of 340—348K. For films obtained at the substrate temperatures > 348K, the dependence of conductivity (σ) on temperature (T) is analogous to the σ—T dependence observed for massive specimens. The forbidden bandwidth (ΔE) found for the slope of the curve σ—$1/T$ is 0.60 ev. The activation energy for the impurity conductivity is 0.05 ev. The absorption spectrum of the film was investigated in both the optical and near IR regions. The optical width ΔE_0 = 0.69 ev was

Card 1/2

APPROVED FOR RELEASE: 03/13/2001 CIA-RDP86-00513R001135820007-4"

"APPROVED FOR RELEASE: 03/13/2001 CIA-RDP86-00513R001135820007-4

L 05809-67

ACC NR: AR6031882

determined from the basic absorption edge. Cooling of the specimen resulted in a displacement of the optical absorption edge toward the direction of longwave sector. For ΔE, the temperature coefficient (β) was found to be close to the value observed for massive GaSb specimens ($\beta = -4 \times 10^{-4}$ ev/degree). A. Zhdan. [Translation of abstract]

SUB CODE: 20/

Card 2/2

APPROVED FOR RELEASE: 03/13/2001 CIA-RDP86-00513R001135820007-4"

"APPROVED FOR RELEASE: 03/13/2001 CIA-RDP86-00513R001135820007-4

PISARENKO, G.A.; RADYA, V.S.; GEROTSKIY, V.A.; BLIKANOV, A.A.; MOKRONOSOV, Ye. D.; YEFREMOV, P.N.; BORSHCHER, L.B.; YEFIMOV, I.Z.; MYKOL'NIKOV, A.A.; BATALOV, A.N.; TSEPOVA, M.N.

Casting magnesium cast iron into a chill with a metal core. Stal' 24 no.7:607-610 Jl '64. (MIRA 18:1)

1. Ural'skiy nauchno-issledovatel'skiy institut chernykh metallov, Lys'venskiy i Severskiy metallurgicheskiye zavody i Nizhne-Tagil'skiy metallurgicheskiy kombinat.

APPROVED FOR RELEASE: 03/13/2001 CIA-RDP86-00513R001135820007-4"

"APPROVED FOR RELEASE: 03/13/2001 CIA-RDP86-00513R001135820007-4

FREYDENZON, Ye.Z.; FREYDENZON, Yu.Ye.; KOTSAR', S.L.; ZATULOVSKAYA, [illegible]; Prinimali uchastiye: KAS'YANOVA, K.S.; MIDRIK, L.Ya.; [illegible], T.D.; KOTEL'NIKOVA, Z.G.; VOYLOSHNIKOVA, A.I.; [illegible], [illegible]; GNATYUK, P.I.; MYKOL'NIKOV, A.A.; MEKSER, A.Ye.; [illegible], [illegible]; OGORODNIKOV, G.K.

Developing an efficient shape for slab ingots. Stal' [illegible] 539-543 Je '65. [illegible]

1. Nizhne-Tagil'skiy metallurgicheskiy kombinat (for Ye. [illegible], Yu. Freydenzon, Kotsar', Zatulovskaya).

APPROVED FOR RELEASE: 03/13/2001 CIA-RDP86-00513R001135820007-4"

"APPROVED FOR RELEASE: 03/13/2001 CIA-RDP86-00513R001135820007-4

MYKOL'NIKOV, I.A.; OSHURKOVA, L.S.

Experience in the work with packed towers. Koks i khim. no.3: 52-54 '64. (MIRA 17:4)

1. Kuznetskiy metallurgicheskiy kombinat.

APPROVED FOR RELEASE: 03/13/2001 CIA-RDP86-00513R001135820007-4"

"APPROVED FOR RELEASE: 03/13/2001 CIA-RDP86-00513R001135820007-4

MYKULYAK, V.G.

Use of novocaine intravenously in the surgical treatment of thyrotoxicosis. Vrach. delo no.8:20-23 Ag '60. (MIRA 13:9)

1. Bereshanskaya mezhrayonnaya bol'nitsa Ternopol'skoy oblasti (nauchnyy rukovoditel' raboty - prof. I.I. Fedorov).
(THYROID GLAND--DISEASES) (NOVOCAINE)

APPROVED FOR RELEASE: 03/13/2001 CIA-RDP86-00513R001135820007-4"

"APPROVED FOR RELEASE: 03/13/2001 CIA-RDP86-00513R001135820007-4

MYKULYAK, V. G.

Cand Med Sci - (diss) "Pre-operative preparation of patients with thyreotoxicosis by use of internal injections of novocaine." L'vov, 1961. 17 pp; (L'vov State Medical Inst); 150 copies; price not given; (KL, 5-61 sup, 204)

APPROVED FOR RELEASE: 03/13/2001 CIA-RDP86-00513R001135820007-4"

"APPROVED FOR RELEASE: 03/13/2001 CIA-RDP86-00513R001135820007-4

MYKYTEY, M. D.

SEP.
.R 3033

KAK MY DOBILIS' VYSOKOGO UROZHAYA SAKHARNOY SVEKLY. MOSKVA, IZD-VO ZNANIYE, 1952. 14 p. (VSESOYUZNOYE OBSHCHESTVO PO RASPROSTRANENIYU POLITICHESKIKH I NAUCHNYKH ZNANIY. 1952, SERIYA 3, NO. 29)

APPROVED FOR RELEASE: 03/13/2001 CIA-RDP86-00513R001135820007-4"

"APPROVED FOR RELEASE: 03/13/2001 CIA-RDP86-00513R001135820007-4

MYKYTIUK, Jarosław (Gdansk)

Industrial ventilation and technical progress. Przegl kolej mechan 16 [i.e. 15] no.3:80 Mr '63.

APPROVED FOR RELEASE: 03/13/2001 CIA-RDP86-00513R001135820007-4"

"APPROVED FOR RELEASE: 03/13/2001 CIA-RDP86-00513R001135820007-4

MYKYTYN, Peter, inz.

Present experience with construction of mines in Slovakia and southern Moravia and the outlook. Uhli 3 no.12:414-418 D '61.

1. Statna planovaci komisia, Praha.

(Lignite) (Mining engineering)

APPROVED FOR RELEASE: 03/13/2001 CIA-RDP86-00513R001135820007-4"

"APPROVED FOR RELEASE: 03/13/2001 CIA-RDP86-00513R001135820007-4

MYKYTYN, Peter, inz.

Determination of the capacity of underground mining machines and calculation of their utilization. Uhli 5 no. 12: 411-415 D '63.

1. Statni komise pro rozvoj a koordinaci vedy a techniky.

APPROVED FOR RELEASE: 03/13/2001 CIA-RDP86-00513R001135820007-4"

"APPROVED FOR RELEASE: 03/13/2001 CIA-RDP86-00513R001135820007-4

MYL, Jiri

Chemicka statika a kinetika. Dil. 2. Skupenske stavy hmoty. (Chemical Statics and Kinetics. Vol. 2. State of Matter; a university textbook. 1st ed. illus.) For the students of the Higher School of Chemical Engineering in Pardubice. Prague, SNTL, 1957. 88 p.

Bibliograficky katalog, CSR, Ceske knihy, No. 36. 15 Oct 57. p. 780

APPROVED FOR RELEASE: 03/13/2001 CIA-RDP86-00513R001135820007-4"

"APPROVED FOR RELEASE: 03/13/2001 CIA-RDP86-00513R001135820007-4

1

4E3d

2mwy

4E2c

4

Preparation of sodium tetraphenylborate. Jiří Mášl, Jiří Kvapil, and Oto Leman. *Chem. průmysl* 9, 71(1959). —The procedure of Levina and Gudriniece (*C.A.* 49, 2940e) was used to prep. Ph_4BNa from PhMgBr and BF_3-Et_2O, except that, instead of isolation with Na_2CO_3, the authors prepd. the ammonium salt and converted it with NaOMe to the aq. Na salt in 55 to 60% yield. ~~J. L.~~

APPROVED FOR RELEASE: 03/13/2001 CIA-RDP86-00513R001135820007-4"

"APPROVED FOR RELEASE: 03/13/2001 CIA-RDP86-00513R001135820007-4

4

Influence of crystallization conditions on the purity of crystals. Jiří Mýl and Josef Kvapil (Vysoká škola chem. technol., Pardubice, Czech.). *Chem. průmysl* 9, 628-30 (1959).—It is demonstrated that the Doerner-Hoskins law (cf. *C.A.* 19, 1384) giving the content of impurities in crystals in relation to the content of impurities in a mother liquor, which was derived for equil. between the soln. and the surface of crystal, can be used also in cases of the equil. between the surface of crystal and the thin film of soln. surrounding this crystal. P. Čeleda

APPROVED FOR RELEASE: 03/13/2001 CIA-RDP86-00513R001135820007-4"

"APPROVED FOR RELEASE: 03/13/2001 CIA-RDP86-00513R001135820007-4

MYL, J.; KVAPIL, J.

Use of the Toepler method for the determination of the solubility of solid substances in liquids. Coll Cz Chem 25 no.1:194-198 Ja '60. (EEAI 9:12)

1. Institut fur physikalische Chemie, Technische Hochschule fur Chemie, Pardubice.
(Solubility) (Solids) (Liquids)

APPROVED FOR RELEASE: 03/13/2001 CIA-RDP86-00513R001135820007-4"

"APPROVED FOR RELEASE: 03/13/2001 CIA-RDP86-00513R001135820007-4

MÝL, J.

Applications of Toepler's method to the study of the crystallization diagrams in ternary systems; the completion of the diagram in the system $K_2O-P_2O_5-H_2O$. J. Mýl and Z. Šolc (Vysoká škola chem.-technol., Pardubice, Czech.). *Collection Czechoslov. Chem. Communs.* 25, 2414-18(1960) (in German).—The modification of the Toepler method for detg. the soly. of solids in liquids described previously (*CA* 54, 16117*d*) is applied to the study of ternary systems. From the exptl. detd. satn. temps. the equil. isotherms can be constructed. As an illustration the ternary diagram $K_2O-P_2O_5-H_2O$ is completed at temps. from 25 up to 50°. E. Erdős

4
JAJ (NB)

APPROVED FOR RELEASE: 03/13/2001 CIA-RDP86-00513R001135820007-4"

"APPROVED FOR RELEASE: 03/13/2001 CIA-RDP86-00513R001135820007-4

S/564/61/003/000/002/029
D258/D304

AUTHORS: Shmid, Y., Kvapil, Y., Myl, Y., and Sholts, Z. (Czechoslovak Socialist Republic)

TITLE: The influence of supersaturation on the formation of parasitic crystals

SOURCE: Akademiya nauk SSSR. Institut kristallografii. Rost kristallov, v. 3, 1961, 273-277

TEXT: This paper is the first of a series concerned with the factors influencing crystal growth, especially in chemical technological processes. The authors determined the lower limit of the metastable region for the supersaturated solutions of monoammonium phosphate (MAP), dipotassium (d)-tartrate (DPT), potassium alum, and Seignette's salt. This limit was set in a dynamic process by recording the solution temperature at which the first crystals were formed. The temperature of saturation was read at the time at which the neighborhood of the first formed crystal was optically homogeneous. The apparatus is shown in Fig. 1. A

Card 1/[illegible]

APPROVED FOR RELEASE: 03/13/2001 CIA-RDP86-00513R001135820007-4"

"APPROVED FOR RELEASE: 03/13/2001 CIA-RDP86-00513R001135820007-4

powerful light source situated opposite the observing stereo-microscope emits parallel rays across the plexiglass container. Another light source, at 90° from the first one, illuminates a small section of the bottom and traps each crystal as it comes down. The microscope is simultaneously focused onto the illuminated part of the bottom and on part of the parallel rays. Salts of analytical grade were used and the results checked against those obtained with optically pure solutions. The latter were made by partly dissolving crystals with the aid of steam, draining the resulting solution, and then distilling water into the container in order to dissolve the remainder of the crystals. This final solution, saturated at 55°C, remained stable for 20 hours at 0°C. The lower limit of the metastable region was found to be a function of overheating. Lowered curves of temperature v. concentration resulted for increasingly higher overheating. These curves were approximately parallel with the curve of solubility for overheating periods of 1 hour. Thus, when overheating by 30°C, the temperature of crystallization of DPT was lowered by 10°C and that of MAP by 15°C; that of Seignette's salt was lowered by 18°C and that of potassium alum by 30°C. There are 6 figures and 9

APPROVED FOR RELEASE: 03/13/2001 CIA-RDP86-00513R001135820007-4"

"APPROVED FOR RELEASE: 03/13/2001 CIA-RDP86-00513R001135820007-4

S/564/61/003/000/002/029
D258/D304

The influence of...

references: 1 Soviet-bloc and 8 non-Soviet-bloc. The references to the English-language publications read as follows: R. P. Rastogi, J. Amer. Chem. Soc., 3129, 1952; B. S. Strikantan, J. Indian Chem. Soc., 29, 674, 1952; A. Seidell, Solubilities, I. N. Y., 1953, p. 101; Huai Ting Hsü, L. Warren, McCabe, Ind. Engng. Chem., 26, 1201, 1934.

ASSOCIATION: Department of Physical Chemistry, Chemical Technological College, Pardubice; Institute of Mineral Research

Card 3/3

APPROVED FOR RELEASE: 03/13/2001 CIA-RDP86-00513R001135820007-4"

"APPROVED FOR RELEASE: 03/13/2001 CIA-RDP86-00513R001135820007-4

MYL, J.; KVAPIL, J.

Use of acoustic effects for identification of changes in crystal lattice. Coll Cz Chem 27 no.5:1099-1104 My '62.

1. Institut fur anorganische Technologie, Technische Hochschule fur Chemie, Pardubice.

APPROVED FOR RELEASE: 03/13/2001 CIA-RDP86-00513R001135820007-4"

"APPROVED FOR RELEASE: 03/13/2001 CIA-RDP86-00513R001135820007-4

MYL, Jiri

"Physics and technology of ultrared radiation" by Werner Brugel. Reviewed by Jiri Myl. Chem prum 13 no.6:320 Je '63.

1. Vysoka skola chemicko-technologicka, Pardubice.

APPROVED FOR RELEASE: 03/13/2001 CIA-RDP86-00513R001135820007-4"

"APPROVED FOR RELEASE: 03/13/2001 CIA-RDP86-00513R001135820007-4

S/058/63/000/001/116/120
A062/A101

AUTHOR: Mýl, J., Kvapil, J.

TITLE: Application of acoustic methods for indicating crystal lattice changes. I. Study of the changes in chemical processes.

PERIODICAL: Referativnyy zhurnal, Fizika, no. 1, 1963, 73, abstract 1Zh437 ("Collect. Czechosl. Chem. Communs", 1962, v27, no. 7, 1517 - 1520, German; summary in Russian)

TEXT: To investigate chemical reactions of solid substances, use was made of the method of recording the acoustic effects that take place in heating of crystals, liberation of gases, dehydration processes of thermal decompositions, etc. The results are compared with the data of the differential thermal analysis.

[Abstracter's note: Complete translation]

Card 1/1

APPROVED FOR RELEASE: 03/13/2001 CIA-RDP86-00513R001135820007-4"

"APPROVED FOR RELEASE: 03/13/2001 CIA-RDP86-00513R001135820007-4

Z/009/63/000/004/001/002
E112/E435

AUTHORS: Mýl Jiří, Šalc Zdeněk

TITLE: Method for the determination of velocity and direction of stream lines

PERIODICAL: Chemický průmysl, no.4, 1963, 189-190

TEXT: The method is based on the use of suspended fluorescent anthracene particles lighted with UV light to give photographs in black-and-white or color film with a conventional camera and a timed exposure. Anthracene, purified by distillation from an ethylene glycol solution at 197°C gave a product of sufficient purity and strong fluorescence in daylight. Its particle density is quite close to that of the liquid and settling out is minimized. The slight solubility of anthracene in water caused a complication and this was obviated by using an electrolyte solution instead of water. Dispersed anthracene particles can also be utilized in the study of stream line patterns in gases. A block diagram of the unit is shown and a photograph of an air stream line pattern in a sublimation apparatus presented. There are 2 figures.

ASSOCIATION: Vysoká škola chemickotechnologická, Pardubice (University of Chemical Technology, Pardubice)

Card 1/1 SUBMITTED: August 6, 1962

APPROVED FOR RELEASE: 03/13/2001 CIA-RDP86-00513R001135820007-4"

"APPROVED FOR RELEASE: 03/13/2001 CIA-RDP86-00513R001135820007-4

MYL, Jiri; KOUBOVA, Drahomira

Solubility of ammonium sulfate in water in the presence of sulfuric acid. Chem prum 14 no.1:38-40 Ja'64.

1. Katedra anorganicke technologie, Vysoka skola chemicko-technologicka, Pardubice.

APPROVED FOR RELEASE: 03/13/2001 CIA-RDP86-00513R001135820007-4"

"APPROVED FOR RELEASE: 03/13/2001 CIA-RDP86-00513R001135820007-4

MYL, Jiri; SOLC, Zdenek; KVAPIL, Josef

Crystallization parameters of technically important salts. Sbor VSChT Pardubice no.1:89-96 '63.

1. Chair of Inorganic Technology, Higher School of Chemical Technology, Pardubice, and Research Institute of Minerals, Turnov.

APPROVED FOR RELEASE: 03/13/2001 CIA-RDP86-00513R001135820007-4"